PHOENIX

SPECIFICATIONS

PHOENIX

40MM BOTTLE TRAP

PRODUCT CODE:	800-8950-10
FINISH:	MATTE BLACK
WELS:	N/A

MAINTENANCE AND CARE:

- All surfaces should be cleaned with mild liquid detergent or soap and water.
- Do not use cream cleaners or citrus based cleaning products, as they are abrasive.
- Use of unsuitable cleaning agents may damage the surface. Any damage caused in this way will not be covered by warranty.

AVAILABLE IN:

CHROME | MATTE BLACK | BRUSHED GOLD | GUN METAL | BRUSHED NICKEL

PACKAGING INCLUDES

- 1 x Bottle trap
- 1 x Installation instructions
- 1 x Warranty card

FOR MORE INFORMATION VISIT
www.phoenixtapware.com.au

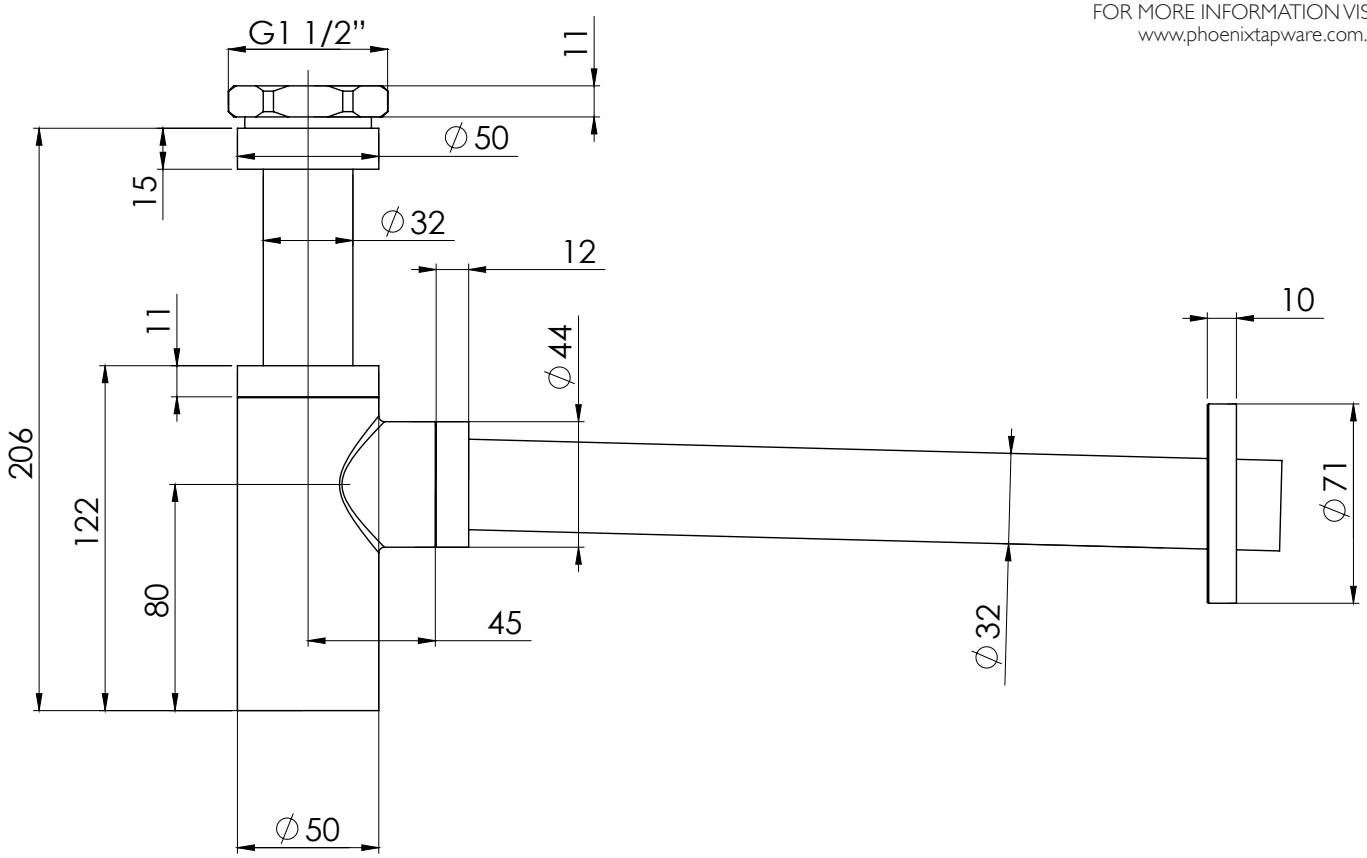

1 YEAR WARRANTY PARTS & LABOUR

PLEASE CLICK HERE TO VIEW FULL WARRANTY

While we aim to ensure the specifications shown are correct at time of printing, Phoenix Tapware reserves the right to make modifications without prior notice. Always use the physical product measurements for mark-ups and roughing-in as the line drawing shown may differ from the actual product over time. All measurements are shown in millimetres.

www.phoenixtapware.com.au
03 9780 4200