STUDIO BAGNO

# Edge Mk2 Round Basin – RH bowl

**STYLE**

Bench/Wall

**CODE**

NTH (EDGEMK2RR/0)
1TH (EDGEMK2RR/1)

**COLOURS**

White.

**OVERFLOW & WASTE**

32 mm overflow plug & waste not included.

**NOTES**

Not glazed at rear

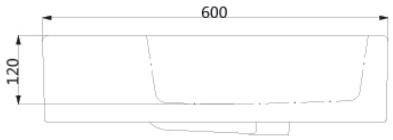


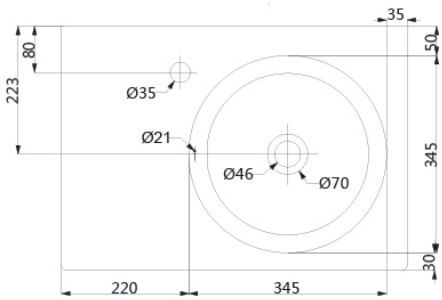


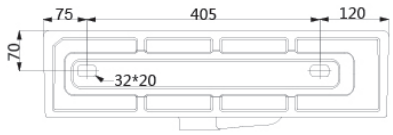


Note: All dimensions are in millimetres and are subject to normal manufacturing variances.
Studio Bagno Pty Ltd reserves the right to vary specifications at any time without notice. Date created: 07/03/2018