STUDIO BAGNO

MILADY 70

STYLE

Bench Basin

CODE

MI70/1

COLOURS

White

Premium Colours Available

OVERFLOW & WASTE

32 mm overflow plug & waste not included

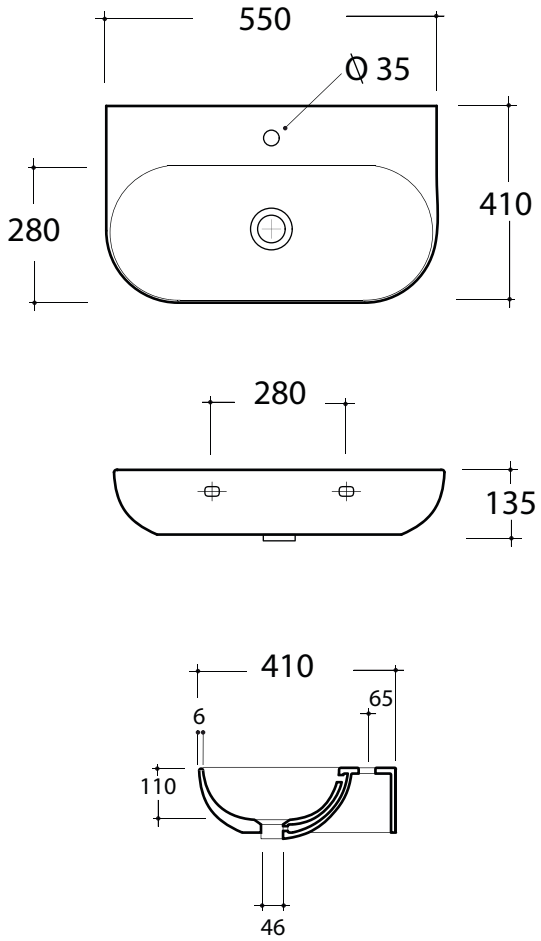

Note: All dimensions are in millimetres and are subject to normal manufacturing variances.
Studio Bagno Pty Ltd reserves the right to vary specifications at any time without notice. Date created: 25/07/2018