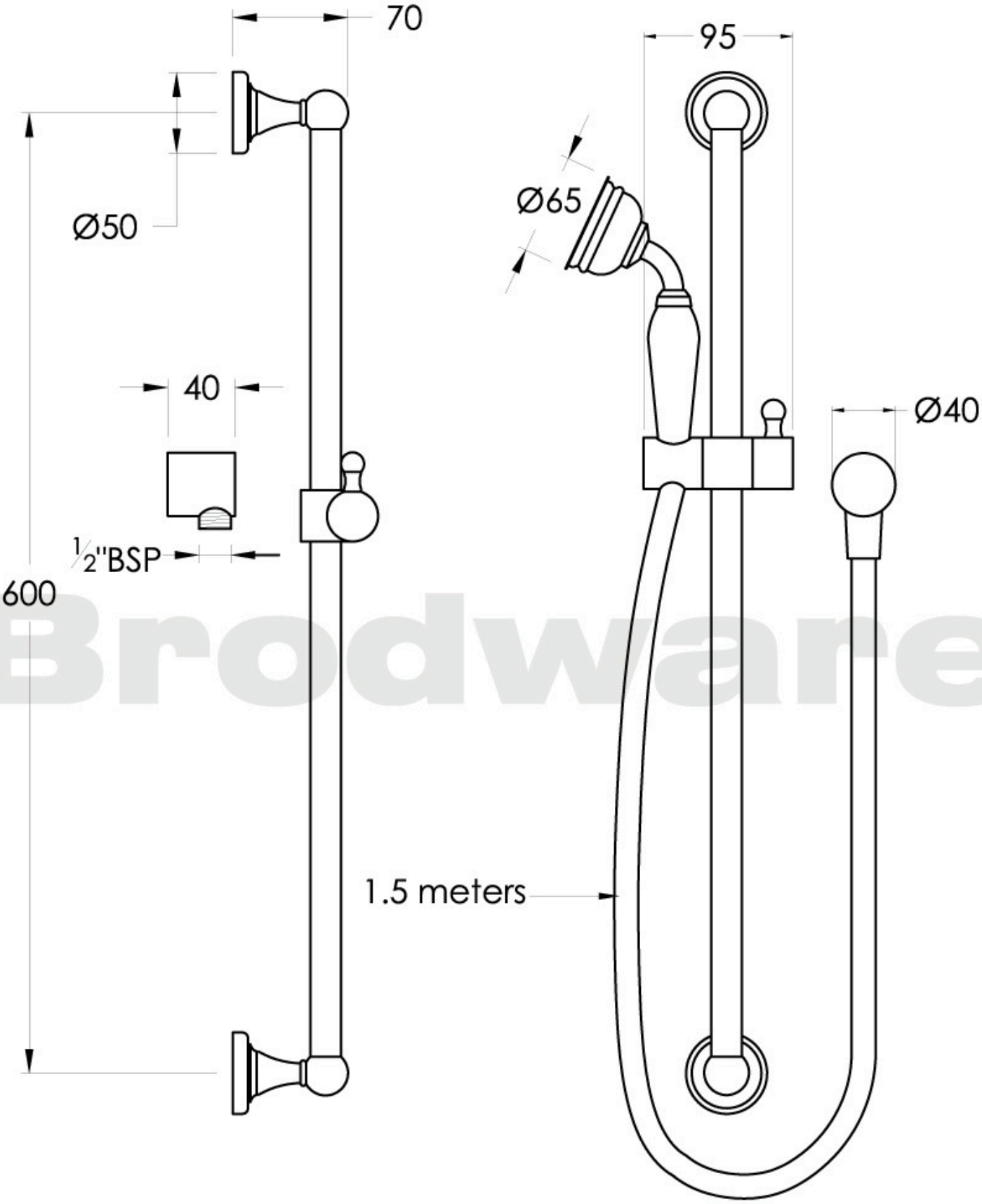

Brodware

NEU ENGLAND

1.8034.00.0.XX

XX Indicates finish
Manufacturing engineers of quality commercial and residential fittings
Dimensions subjects to change without notice. All dimensions are approximate
Copyright © Brodware Industries 2013. www.brodware.com.au

Brodware™